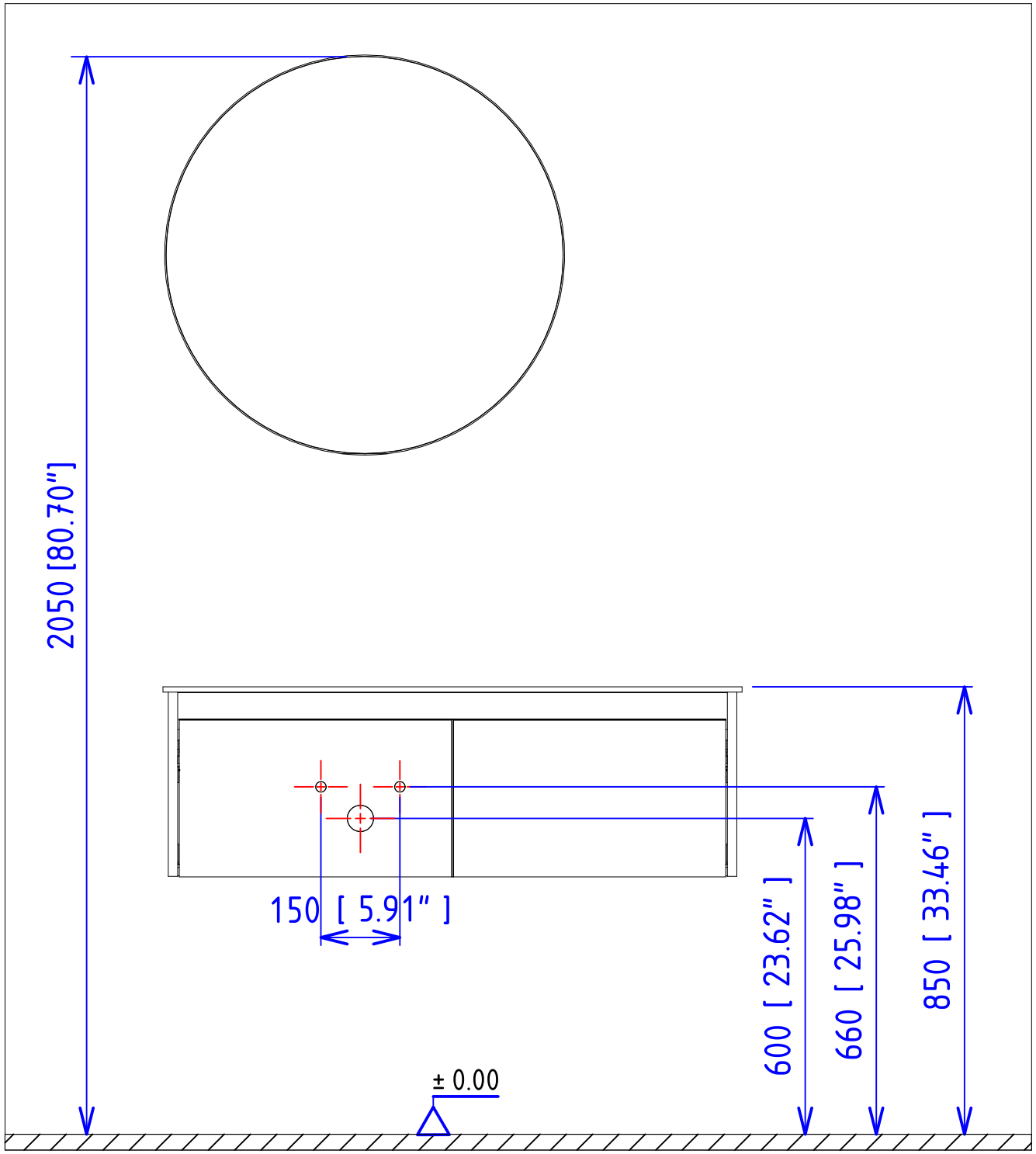
2050 [80.70"]
150 [5.91"]
600 [23.62"]
660 [25.98"]
850 [33.46"]
± 0.00

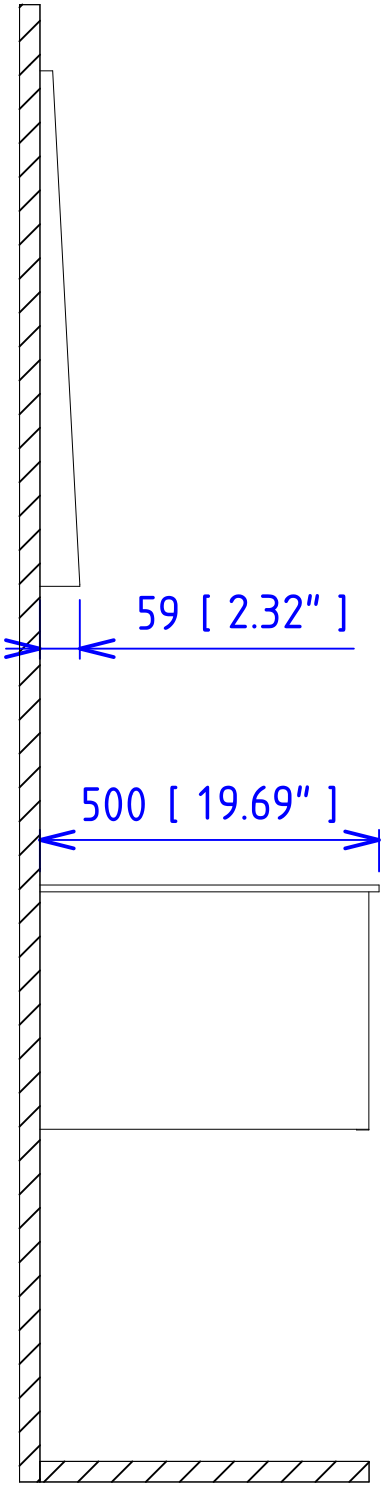
59 [2.32"]
500 [19.69"]